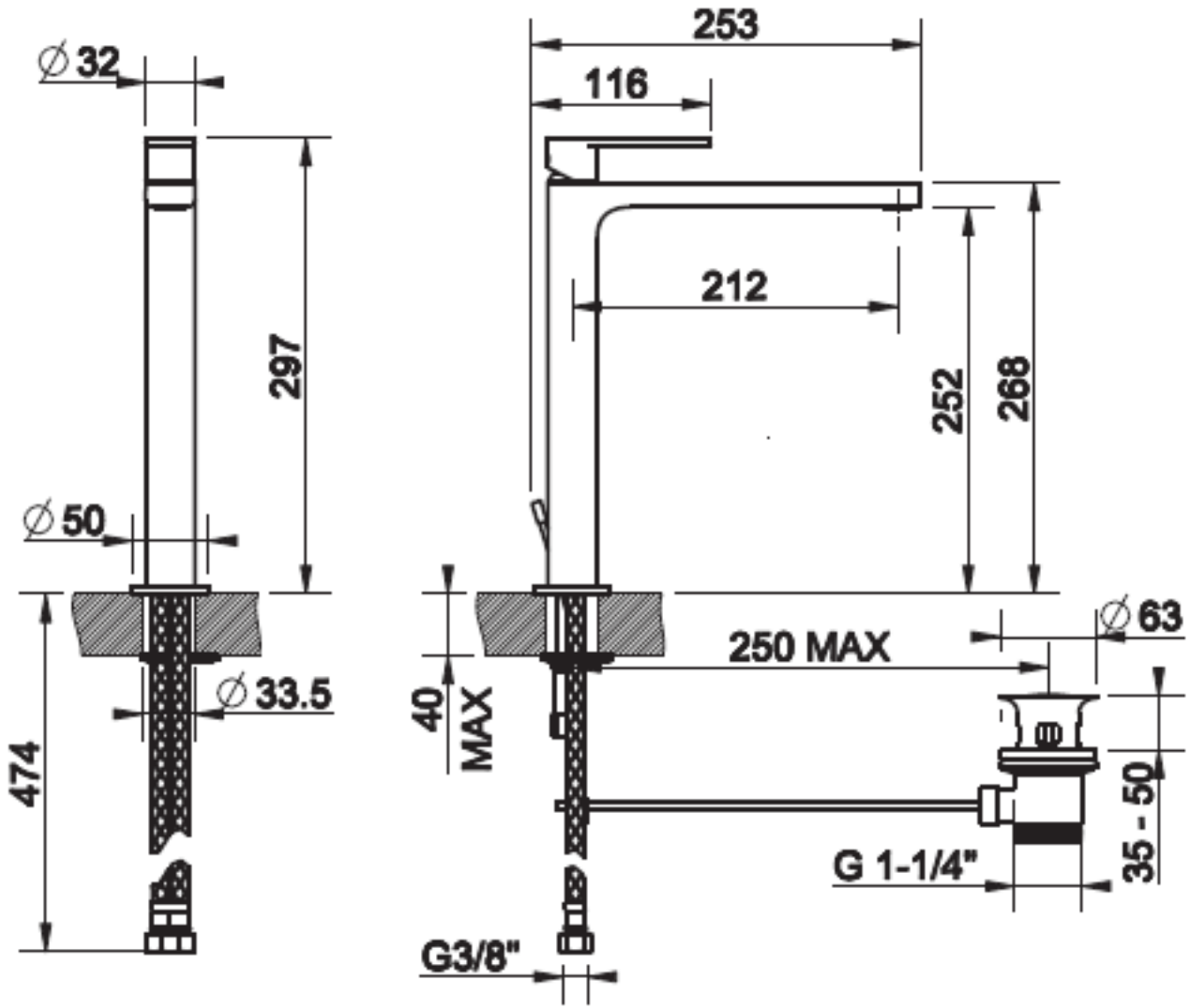
∅32
297
∅50
474
∅33.5
253
116
212
252
268
∅63
250 MAX
40
MAX
35 - 50
G 1-1/4"
G3/8"