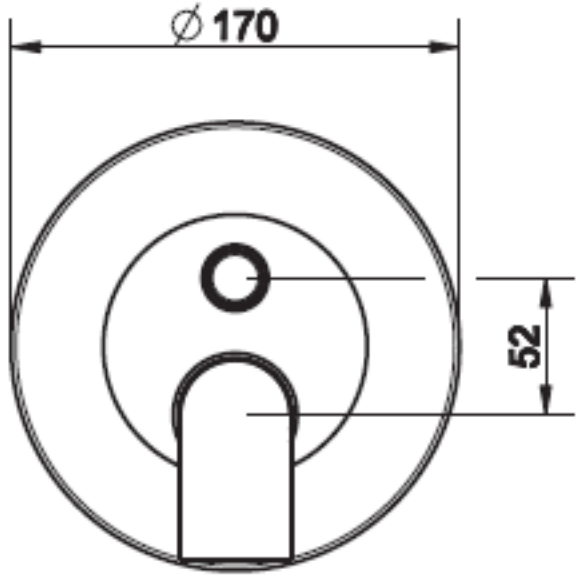
∅170
52

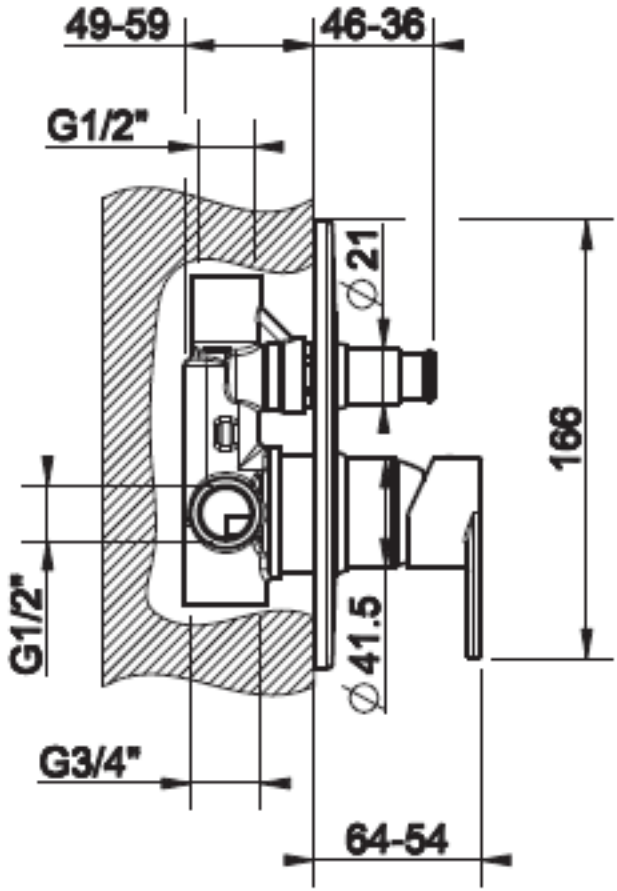
49-59
46-36
G1/2"
∅21
166
G1/2"
∅41.5
G3/4"
64-54